

HOTELS

Heated towel rail 500W

DIMENSIONS

Length	500 mm
Height	1200 mm

COLOURS AND FINISHES

P3 Glossy White

TECHNICAL DRAWINGS

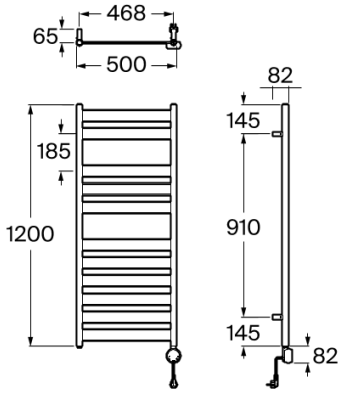

FEATURES

Heated towel rail. Includes thermostat and digital control unit with the following functions: temperature selection, Comfort mode, Eco mode, anti-freeze mode, Boost mode, program mode, and open window detection. 500W power. Mounting kit included.

Installation options: Only with screws

Installation type: Wall-mounted

Material: Metal

© Copyright 2026, Roca Sanitario, S.A. - All rights reserved | 20-11-2026 | https://www.export.roca.com/products/heated-towel-rail-500w-816643..0?sku=A816643P30

Hotels



An alliance between simplicity, style and functionality. This collection has been designed to adapt to any space and requirement. Inspired by minimalist forms, it is characterised by its great versatility. It is a solution thought of for both small and large design projects, whether public or private.

INSTALLATION AND USER MANUALS

Installation Handbook

© Copyright 2026, Roca Sanitario, S.A. - All rights reserved | 20-11-2026 | https://www.export.roca.com/products/heated-towel-rail-500w-816643..0?sku=A816643P30