

VICTORIA

# Heated towel rail 500W

DIMENSIONS

| | |
|---|---|
| Length | 500 mm |
| Height | 1200 mm |

COLOURS AND FINISHES

P3 Glossy White

TECHNICAL DRAWINGS

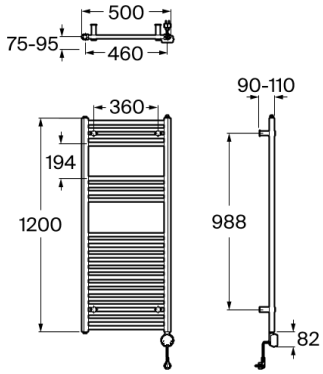


FEATURES

Heated towel rail. Includes thermostat and digital control unit with the following functions: temperature selection, Comfort mode, Eco mode, anti-freeze mode, Boost mode, program mode, and open window detection. 500W power. Includes mounting kit.

Installation options: Only with screws

Installation type: Wall-mounted

Material: Metal

© Copyright 2026, Roca Sanitario, S.A. - All rights reserved | 18-11-2026 | https://www.export.roca.com/products/heated-towel-rail-500w-816641..0?sku=A816641P30

# Victoria



An extensive accessories range with a functional and timeless design. Besides the installation with screws, Victoria allows an adhesive fixation system that prevents drilling and guarantees high resistance (up to 5 kg. of static load). The perfect suit for for private bathrooms, semi-public areas and public spaces, including solutions for people with reduced mobility.

INSTALLATION AND USER MANUALS

Installation Handbook

© Copyright 2026, Roca Sanitario, S.A. - All rights reserved | 18-11-2026 | https://www.export.roca.com/products/heated-towel-rail-500w-816641..0?sku=A816641P30