

VICTORIA

Heated towel rail 500W

DIMENSIONS

Length	500 mm
Height	1200 mm

COLOURS AND FINISHES

NB Matt Black

TECHNICAL DRAWINGS

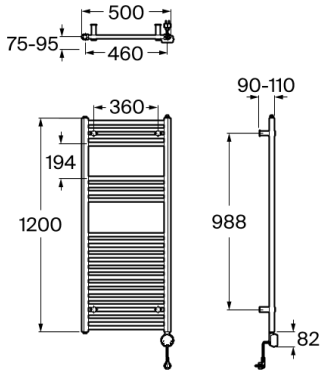

FEATURES

Heated towel rail. Includes thermostat and digital control unit with the following functions: temperature selection, Comfort mode, Eco mode, anti-freeze mode, Boost mode, program mode, and open window detection. 500W power. Includes mounting kit.

Installation options: Only with screws

Installation type: Wall-mounted

Material: Metal

© Copyright 2026, Roca Sanitario, S.A. - All rights reserved | 12-11-2026 | https://www.export.roca.com/products/heated-towel-rail-500w-816641..0?sku=A816641NB0

Victoria



An extensive accessories range with a functional and timeless design. Besides the installation with screws, Victoria allows an adhesive fixation system that prevents drilling and guarantees high resistance (up to 5 kg. of static load). The perfect suit for for private bathrooms, semi-public areas and public spaces, including solutions for people with reduced mobility.

INSTALLATION AND USER MANUALS

Installation Handbook

© Copyright 2026, Roca Sanitario, S.A. - All rights reserved | 12-11-2026 | https://www.export.roca.com/products/heated-towel-rail-500w-816641..0?sku=A816641NB0